SLDDRW File Location: D:\TialPDM\Engineering\Products\Public Drawings\BOV\Q BOV PUBLIC

REVISIONS			
REV	DATE	DESCRIPTION	DWN
A	4/16/18	RELEASED	AJE
-	-	-	-
-	-	-	-

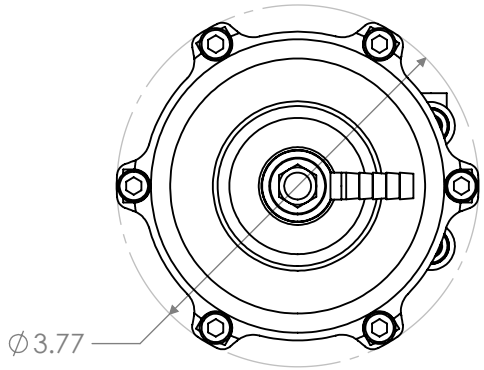

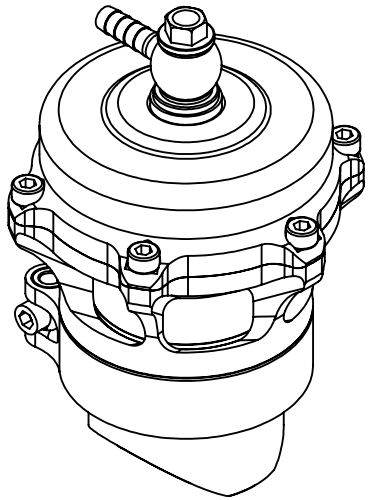

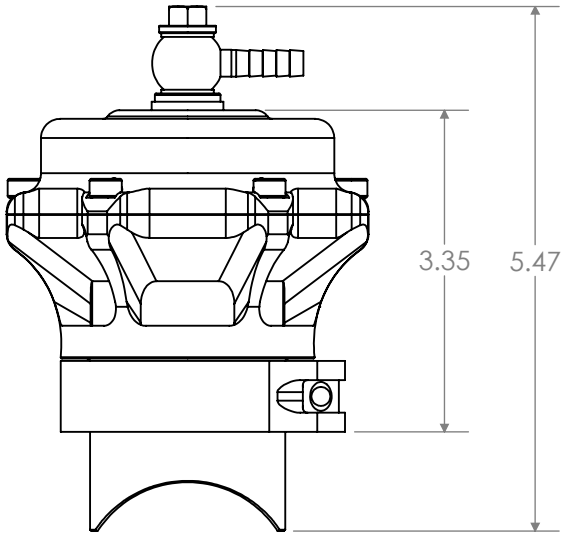

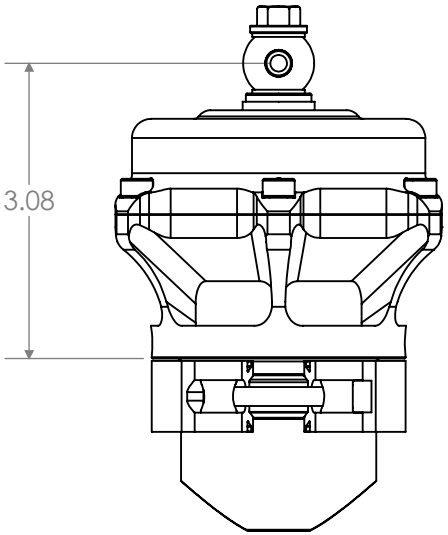

TiAL PRODUCTS
450 S. SHIAWASSEE
OWOSSO, MI 48867

UNLESS OTHERWISE SPECIFIED:
DIMENSIONS ARE IN INCHES
ANGULAR DIMENSIONS ARE IN DEGREES

TOLERANCES:
.XX ± .01
.XXX ± .005
.XXXX ± .001
ANGULAR: ± .5 DEG
EDGE/CORNER BREAKS .015
FILLET RADII .015
MAX SURFACE ROUGHNESS 125 Ra

DO NOT SCALE DRAWING

MATERIAL

PART DESCRIPTION
Q BOV PUBLIC

OP#	TYPE		
SIZE A	PART NO.		REV A
DRAWN BY: AJE	DATE DRAWN: 4/16/18	CHECKED BY: XXX	DATE CHECKED: 12/17/15	SHEET: 1 OF 1

PROPRIETARY AND CONFIDENTIAL
THE INFORMATION CONTAINED IN THIS DRAWING IS THE SOLE PROPERTY OF TiAL PRODUCTS. ANY REPRODUCTION IN PART OR AS A WHOLEWITHOUT THE WRITTEN PERMISSION OF TiAL PRODUCTS IS STRICTLY PROHIBITED.

5 4 3 2 1

Last saved: 4/16/2018 2:54:42 PM by: aeby